ವಿಶ್ವೇಶ್ವರಯ್ಯ ತಾಂತ್ರಿಕ ವಿಶ್ವವಿದ್ಯಾಲಯ-ಬೆಳಗಾವಿ

VISVESVARAYA TECHNOLOGICAL UNIVERSITY - BELAGAVI

A Project Report On

"FOOD DELIVERY ROBOT WITH SMART MONITORING"

In partial fulfillment for the award of degree of

BACHELOR OF ENGINEERING

IN

ELECTRICAL AND ELECTRONICS ENGINEERING

Submitted By

Mr. ANUP C	**USN:2BU22EE010**
Mr. MUBARAK NADAF	**USN:2BU22EE028**
Miss. SAHANA PATIL	**USN:2BU22EE038**
Miss. SHREYA PYATI	**USN:2BU22EE047**

Under the Guidance of

Dr. Lalitha Darbha

Associate Professor

Department of Electrical and Electronics Engineering

S.G. Balekundri Institute of Technology, Shivabasava Nagar, Belagavi-10

S.S EDUCATION TRUST's

S.G Balekundri Institute of Technology, Shivabasava Nagar Belagavi-10

An ISO 21001:2018 certified institution,

Department of Electrical and Electronics Engineering.

Accredited by NBA, New Delhi

2025-26

S. S. Education Trust's

S.G Balekundri Institute of Technology

Shivabasava Nagar Belagavi, Karnataka, India – 590010

Department of Electrical & Electronics Engineering
S.G Balekundri Institute of Technology, Shivabasava Nagar
Belagavi-10, Karnataka, INDIA

CERTIFICATE

This is to certify that **Mr. Anup Chanapannavar(USN:2BU22EE010), Mr. Mubarak Nadaf(USN: 2BU22EE028), Miss. Sahana Patil (USN: 2BU22EE038), Miss. Shreya Pyati(USN: 2BU22EE047)**are bonafide students of Department of Electrical & Electronics Engineering, S.G Balekundri Institute of Technology, Shivabasava Nagar Belagavi-10, Karnataka, INDIA has satisfactorily completed the Project work entitled **"Food delivery robot with smart monitoring "** submitted to Visvesvaraya Technological University, Belagavi in partial fulfillment for the award of Bachelor of Engineering in Electrical & Electronics Engineering in the year 2025-26. It is certified that all corrections/suggestions indicated for Internal Assessment have been incorporated in the report deposited in the departmental library. The Major Project Phase 2 report has been approved as it satisfies the academic requirements in respect of project report prescribed for the said degree.

Dr. Lalitha Darbha
Guide

Dr. Supanna S. Shirguppe
Head of Department

Prof. Suvarna Karki
Central Project Coordinator

Dr. B. R. Patagundi
Principal

Name of the Examiner **Signature with Date**

1.

2.

S. S. Education Trust's

S.G Balekundri Institute of Technology

Shivabasava Nagar Belagavi, Karnataka, India – 590010

Department of Electrical & Electronics Engineering

S.G Balekundri Institute of Technology, Shivabasava Nagar
Belagavi-10, Karnataka, INDIA

CERTIFICATE

This is to certify that **Mr. Anup Chanapannavar (USN: 2BU22EE010), Mr. Mubarak Nadaf (USN: 2BU22EE028), Miss. Sahana Patil (USN: 2BU22EE038), Miss. Shreya Pyati (USN: 2BU22EE047)** has satisfactorily completed the Project work entitled **"Food delivery robot with smart monitoring",** under my supervision and It is certified that all corrections/suggestions indicated for Internal Assessment have been incorporated in the report deposited in the departmental library. The Major Project Phase 2 report has been approved as it satisfies the academic requirements in respect of project report prescribed for the said degree.

Dr. Lalitha Darbha
Guide
Associate. Professor
Department of Electrical & Electronics Engineering
S.G Balekundri Institute of Technology,
Shivabasava Nagar Belagavi-10, Karnataka, INDIA

Declaration

We hereby declare that the Major Project Phase 2 report entitled **"Food delivery robot with smart monitoring"** submitted by us is original and the Project work has been carried out by us independently in S.S EDUCATION TRUST's, S.G Balekundri Institute of Technology, Shivabasava Nagar Belagavi-10, Department of Electrical & Electronics Engineering, under the guidance of **Dr. Lalitha Darbha** This Major Project Phase 2 report has been submitted in the partial fulfillment for the award of degree of Bachelor of Engineering. We also declare that the matter embodied in this Project report has not been submitted by us for the award of any other degree of any other University or Institute.

Mr. Anup Chanapannavar	**USN: 2BU22EE010**
Mr. Mubarak Nadaf	**USN: 2BU22EE028**
Miss. Sahana Patil	**USN: 2BU22EE038**
Miss. Shreya Pyati	**USN: 2BU22EE047**

Acknowledgement

Though the Major Project Phase 2 report is an team work, we could never have reached the heights or explored the depths without the help, support, guidance and efforts of a lot of people. It gives me an immense pleasure in expressing my gratitude to all those people who have supported us and had their contributions in making this Project report possible.

We would like to express our special appreciation and thanks to our guide **Dr. Lalitha Darbha**, **Associate Professor**, Department of Electrical & Electronics Engineering, S.G Balekundri Institute of Technology, Shivabasava Nagar, Belagavi-10, Karnataka, INDIA, for excellent guidance, support and patience. We have benefited greatly from his/her wealth of knowledge and meticulous editing. Her advice on both Project work as well as on my career have been priceless.

We would like to express our special appreciation and thanks to project coordinator **Ms. Pravina R. Mali**, **Asst. Professor**, Department of Electrical & Electronics Engineering, S.G Balekundri Institute of Technology, Shivabasava Nagar, Belagavi-10, Karnataka, INDIA, for her constant guidance, support and patience.

We express our heartfelt honor to **Dr. Supanna S. Shirguppe**, **Professor and Head**, Department of Electrical & Electronics Engineering, S.G Balekundri Institute of Technology, Shivabasava Nagar, Belagavi-10, Karnataka, INDIA, for her brilliant suggestions and constant motivation during our Project work.

We would like to express my deep gratitude to **Dr. B.R. Patagundi,** Principal, S.G Balekundri Institute of Technology, Shivabasava Nagar, Belagavi-10, Karnataka, INDIA, for his constant support, valuable suggestions and encouragement to pursue our Project work.

We are thankful to my friends and all the staff members of Department of Electrical & Electronics Engineering, S.G Balekundri Institute of Techonology, Shivbasava nagar, Belagavi who assisted, advised, and supported during our Project work.

We would like to thank our parents, for their unconditional trust, timely encouragement and endless patience from childhood till now.

Abstract

The Food Delivery Robot with Smart Monitoring is designed to provide a safe, efficient, and contactless method of delivering food within indoor environments such as hostels, colleges, hospitals, restaurants, and offices. The system integrates Wi-Fi–based remote control, QR code authentication, and real-time video monitoring to ensure secure and reliable delivery. Using an ESP32-CAM module, the robot streams live video to the user through an IP address, allowing continuous monitoring of its movement and surroundings. A smart locking mechanism, activated only after valid QR code verification, prevents unauthorized access to the food compartment and enhances the security of the delivery process. The robot's motion is controlled through a motor driver and DC gear motors, powered by a stable lithium battery system with a buck converter for regulated output. Throughout testing, the system demonstrated smooth navigation, accurate QR validation, stable Wi-Fi communication, and consistent performance of all hardware modules. This project successfully showcases a low-cost, indoor automation solution that reduces human effort, improves hygiene, and enhances safety in food delivery. The model lays a foundation for future advancements in autonomous navigation, AI-based monitoring, and smart service robots.

Table of Contents

	Declaration		i
	Acknowledgement		ii
	Abstract		iii
	Table of Contents		iv
	List of Figures		v
	List of Tables		v
Chapter			**Page No**
01	**Introduction**		
	1.1	**Background of the Project**	**1**
	1.2	**Problem Statement**	**2**
	1.3	**Objectives of the Project**	**3**
	1.4	**Scope of the Project**	**3**
	1.5	**Relevance and Applications**	**4**
02	**Literature Review**		
	2.1	**Overview of Existing Systems**	**5**
	2.2	**Research Gap**	**6**
	2.3	**Summary of Literature Survey**	**7**
03	**Methodology**		
	3.1	**Introduction**	**8**
	3.2	**Block Diagram of the System**	**9**
	3.3	**Working Principle**	**10**
	3.4	**Hardware Requirements**	**10**
	3.5	**Software Requirements**	**17**
	3.5	**Circuit Diagram and Explanation**	**18**
	3.6	**Algorithm and Flowchart**	**20**
	3.7	**Implementation and Testing**	**24**
	3.8	**Project Estimation**	**25**
04	**Results and Discussion**		
	4.1	**Experimental Results**	**26**
	4.2	**Observation Tables**	**29**
	4.3	**Discussion and Analysis of Results**	**30**
	4.4	**Performance Evaluation**	**31**
05	**Applications and Advantages**		
	5.1	**Advantages**	**32**
	5.2	**Applications**	**33**
	5.3	**Limitations**	**34**
	Conclusion and future scope		**35**
	References		**37**

List of Figures

Figure. 3.1	Block diagram of the system	9
Figure. 3.2	L298N Motor driver	10
Figure.3.3	ESP-32 Camera module	11
Figure.3.4	16*2 LCD display	12
Figure.3.5	Relay module	12
Figure.3.6	Step down voltage control module	13
Figure.3.7	Lithium battery (3.7V)	14
Figure.3.8	DC gear motor	14
Figure.3.9	60mm Wheels	15
Figure.3.10	LED indicators	16
Figure.3.11	Arduino IDE	17
Figure.3.12	Motor drive interfacing with ESP32-CAM	18
Figure.3.13	LED status indicator circuit with ESP32-CAM	18
Figure.4.1	Complete hardware setup of system	26
Figure.4.2	LCD display indicating system status	26
Figure.4.3	QR code scanning for door unlocking	27
Figure.4.4	Testing of food delivery with safety monitoring	27
Figure.4.5	Door unlocked after successful QR code verification	28

List of Tables

Table.3.1	Estimation details of the project	25
Table.4.1	Observation table	29

CHAPTER-1

INTRODUCTION

1.1 BACKGROUND

In recent years, the need for automation and secure delivery systems has increased dramatically, especially in the food supply sector. With the rise of online food ordering platforms and a growing demand for fast, hygienic, and contactless delivery, traditional methods involving human delivery personnel are gradually becoming inefficient and risk-prone. This transition has been further accelerated by situations like pandemics, where reducing human contact is crucial. The project titled "Food Delivery Robot with safety monitoring" aims to develop a smart, autonomous delivery robot that not only ensures efficient food delivery but also incorporates theft detection features to secure the delivery process from point to point.

The core idea behind this project is to design a robot capable of navigating autonomously to deliver food items to specified destinations while being monitored in real time. Traditional food delivery models often suffer from challenges such as food tampering, delayed deliveries, misplacements, and theft. In contrast, the proposed system addresses these issues by incorporating an intelligent control system that manages the robot's movement, detects any unauthorized access to the food container, and communicates data instantly to users and administrators. The fast-changing current environment demands automated solutions in all areas that need them for more efficient operation. Modern automation technologies apply across different sectors which help boost operational effectiveness by minimizing manual workforce dependence. This analysis centers on how autonomous systems solve the problems faced by last-mile distribution services while benefiting the environment. These delivery robots possess one important benefit by reducing carbon emissions in delivery circuits. The technology functions to lower emissions which results in an improved sustainable logistics structure. This advanced technology operates efficiently to solve present delivery needs.

The primary goal of this project is to develop a smart, autonomous delivery robot that can transport food packages from a source to the intended recipient without human intervention, all while maintaining real-time monitoring and incorporating a robust theft detection system.

It is designed to navigate through predefined routes, avoiding obstacles and dynamically adjusting its path if needed. The recipient receives notifications about the delivery status and can unlock the food compartment only through verified credentials, such as a mobile-generated OTP or a QR code. This helps to ensure that only the intended recipient can access the food, greatly reducing the risk of theft or unauthorized access.

It allows students and researchers to work on real-world problems with practical applications that could be expanded into commercial or industrial-scale systems. It also opens up opportunities to explore AI integration in the future for route optimization, demand prediction, and self- learning behaviors. As the world moves toward smarter cities and more connected ecosystems, this project lays the foundation for a new era of automated, intelligent, and secure food supply solutions.

1.2 PROBLEM STATEMENT

The delivery robot is designed to ensure secure, contactless food delivery with real-time theft detection and monitoring.

- The rising demand for online shopping and food delivery has led to an increase in the number of goods being transported, resulting in a higher risk of theft and tampering.
- The absence of real-time tracking and monitoring makes it difficult to detect and prevent issues during transportation.
- Food is damaged during transportation due to poor packaging, inadequate handling.
- Inefficient logistics and supply chain management lead to delays, increased costs, and reduced customer satisfaction.
- Human delivery can cause mistakes like mixing up orders or handling food poorly.
- Food may get damaged or become unhygienic during manual delivery.

1.3 OBJECTIVES OF THE PROJECT

- To ensure safety monitoring by using a camera to track the environment and avoid hazards.
- To improve delivery efficiency by reducing human effort and minimizing delivery time in crowded or restricted areas & enable remote monitoring and control of the robot through wireless communication.
- To implement smart locking mechanisms that activate only upon verified delivery at the correct location to prevent unauthorized access.

1.4 SCOPE OF THE PROJECT

- This project covers the design and development of a food delivery robot controlled through Wi-Fi using an IP address.
- The scope includes safe movement of the robot inside indoor environments such as hostels, colleges, and offices.
- The robot will deliver food from one location to another using manual remote control.
- Safety monitoring is included to track the robot's motion and avoid obstacles during delivery.
- The project covers basic hardware integration like motors, sensors, Wi-Fi module, and camera.
- The robot will provide a contactless method of food delivery to improve hygiene and reduce human effort.
- The project focuses on short-distance indoor delivery, not long-range or outdoor navigation.
- The scope includes testing, controlling & monitoring the robot through Wi-Fi IP interface.

1.5 RELEVANCE & APPLICATIONS

The Food Delivery Robot with Safety Monitoring is relevant because it provides a safe, fast, and contactless method of delivering food in restaurants, hospitals, offices, and public places. It reduces human workload, avoids accidents, and ensures hygiene. With the growing need for automation and safety after COVID-19, such robots help improve service quality, reduce labour costs, and maintain continuous monitoring to prevent collisions or unsafe situations.

This robot can be used in restaurants, hospitals, office canteens, hostels, hotels, and industrial cafeterias to deliver food safely and efficiently. It can also be used in old-age homes, quarantine zones, and airports where contactless service and safety monitoring are required.

In addition to improving efficiency, the Food Delivery Robot with Safety Monitoring helps ensure consistency in service quality, which is difficult to achieve with manual staff. The robot can follow a programmed path, maintain uniform delivery time, and operate continuously without fatigue. Its safety features, such as obstacle avoidance and environment monitoring, make it dependable in dynamic spaces like restaurants and hospitals. The project also demonstrates how intelligent automation can create a safer working environment by reducing human-to-human contact and minimizing the risk of accidents. This makes the system highly suitable for modern service sectors that aim to combine speed, safety, and reliability.

CHAPTER-2

LITERATURE REVIEW

2.1 OVERVIEW OF EXISTING SYSTEM

Several researchers have proposed different robotic and IoT-based systems to improve delivery processes and ensure safety.

1. Artificial Intelligence (AI) and Internet of Things (IoT) technologies have been widely adopted to improve smart city infrastructure and transportation safety. Jarabhesapourmal et al. (2024) discussed the role of Artificial Intelligence of Things (AIoT) in smart cities, focusing on advanced solutions for enhancing transportation safety. Their study highlights how intelligent data processing, real-time monitoring, and automated decision-making can reduce traffic accidents and improve urban mobility.
2. In the context of supply chain management, Sallam, Mohamed, and Mohamed (2023) explored the application of IoT technologies to enhance operational efficiency. Their research identifies key challenges, opportunities, and best practices of IoT implementation in supply chains. The study concludes that IoT improves transparency, real-time tracking, inventory management, and decision-making, while also addressing challenges such as data security and system integration.
3. Smart home automation is another major application area of IoT. Balasingam, Zopite, and Mohana (2022) designed an IoT-based smart home automation system that allows users to remotely control and monitor household devices. Their work demonstrates improved convenience, energy efficiency, and security through IoT-enabled automation. The authors highlight the importance of scalable and user-friendly systems for smart living environments.
4. Energy management using distributed IoT systems has gained increasing attention in recent years. Sadeeq and Zeebaree (2021) reviewed IoT-based energy management systems and discussed how distributed architectures enhance performance, reliability, and scalability. Their study emphasizes the role of IoT in optimizing energy consumption, reducing operational costs, and supporting sustainable energy solutions.

5. Automation and robotics have also been utilized in healthcare and delivery systems. Abrar et al. (2020) proposed an autonomous delivery robot designed to prevent the spread of coronavirus in product delivery systems. Their research highlights how robotic automation minimizes human contact and ensures safe and efficient delivery during pandemic situations. The study proves the effectiveness of autonomous robots in public health protection.

2.2 RESEARCH GAP

No Existing System Uses Remote-Controlled Robot Through Wi-Fi IP Address.

- **Research Gap:** No research integrates food delivery with remote controlling of the robot via IP-based Wi-Fi communication.
- **Project Adds**: A robot controlled by a Wi-Fi IP address using a user interface/remote.

No Discussion on Stability of Wi-Fi Based Robot Control.

- **Research Gap:** Research lacks investigation on stable remote robot control using Wi-Fi.
- **Project Adds**: A system tested on the same Wi-Fi network for controlling and monitoring.

Limited Focus on Real-Time Monitoring During Manual Food Delivery.

- **Research Gap:** There is no system providing real-time monitoring and video feed for a manually controlled food delivery robot**.**
- **Project Adds**: Live video monitoring and environment tracking during remote operation.

Lack of Simple and Low-Cost Implementation Techniques

- **Research Gap:** No low-cost, student-friendly, easy-to-build solution specifically for food delivery with safety monitoring.
- **Project Adds**: A simple and cost-effective robot using: Basic sensors, Node-MCU, IP communication.

2.3 SUMMARY OF LITERATURE SURVEY

The reviewed literature highlights the rapid development of IoT-based and robotic systems for improving food delivery, security, and supply chain monitoring. Several studies demonstrate the use of autonomous robots for contactless delivery, showing benefits such as reduced human interaction, improved efficiency, and safer transportation of goods. Research also explores IoT technologies for asset tracking, sensor-based monitoring, theft detection, motion sensing, RFID-based identification, and cloud-based alert systems. These works clearly indicate that modern robotics and IoT can enhance delivery accuracy, security, and real-time data exchange.

However, the existing systems mainly focus on autonomous robots, large-scale supply chain monitoring, and generalized theft detection solutions. While these studies successfully implement sensing devices, cloud communication, and automated surveillance, they do not address food delivery robots that are manually controlled or operated within indoor environments such as campuses, hostels, or office buildings. Furthermore, the reviewed literature does not present any system that integrates remote control via Wi-Fi IP address, combined with real-time monitoring, theft prevention sensors, and live video streaming on a single platform.

Therefore, the literature reveals a clear research gap in the development of a low-cost, Wi-Fi IP-controlled food delivery robot with built-in safety and theft monitoring features. No existing work combines manual robot navigation, environment monitoring, compartment security, and instant alerts within one unified design. This gap provides the motivation for the proposed project, which aims to fill this missing area by implementing a practical, efficient, and secure indoor food delivery robot with real-time safety features.

CHAPTER-3

METHODOLOGY

3.1 INTRODUCTION

The methodology of this project outlines the systematic approach used to design, develop, and implement a Wi-Fi–controlled food delivery robot integrated with real-time safety and theft monitoring features. This chapter explains how each component of the system—from hardware selection to software configuration—works together to achieve secure and efficient food delivery. The methodology focuses on creating a functional prototype that can be remotely operated through an IP-based interface while continuously monitoring the robot's surroundings using sensors and a camera module.

Unlike traditional autonomous delivery robots, this project adopts a remote-controlled framework, allowing users to manually guide the robot within indoor environments such as hostels, colleges, offices, or hospitals. To achieve this, the methodology employs Wi-Fi communication for sending control commands and receiving real-time feedback. A microcontroller (such as Node-MCU/ESP32) acts as the central processing unit that handles robot movement, sensor inputs, and data transmission. The use of IP addressing ensures that the robot can be accessed and operated through any device connected to the same network.

Additionally, the methodology integrates multiple safety features such as obstacle detection, compartment security sensors, and a live video feed for theft monitoring. These safety inputs are processed in real time and communicated to the user through alerts or live streaming. The methodology also includes the testing phase, where robot performance, stability of Wi-Fi control, response time, and accuracy of theft detection are evaluated. Overall, the methodology provides a structured roadmap for developing a cost-effective and secure food delivery robot capable of safe and reliable indoor operation.

3.2 BLOCK DIAGRAM OF THE SYSTEM

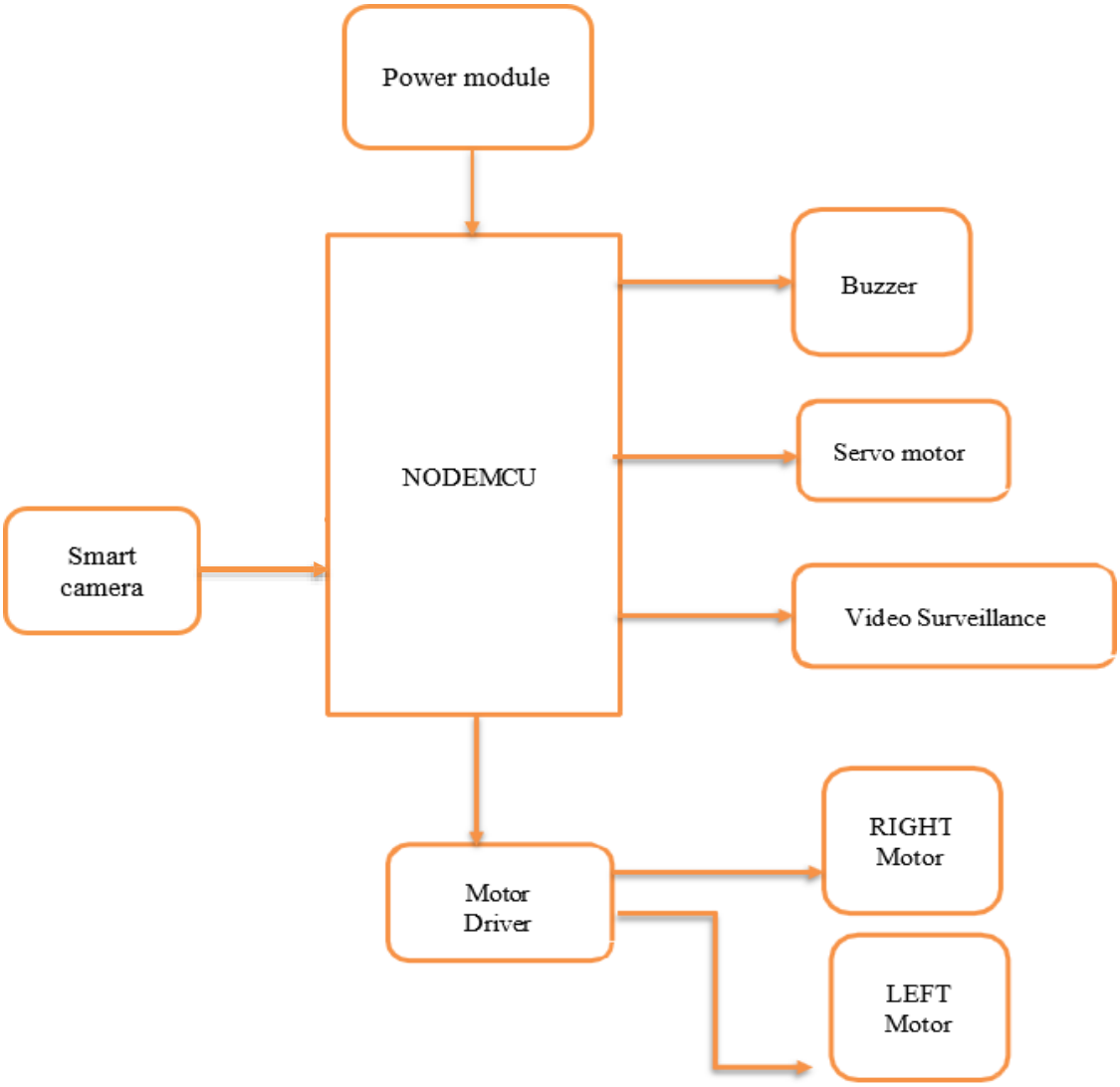

Fig.3.1: Block diagram of the system

Figure 3.1 describes the block diagram of the food delivery robot with smart monitoring system which consists of NODE-MCU, power module, buzzer, servo motor, smart camera, video surveillance, motor driver.

3.3 WORKING PRINCIPLE

The food delivery robot operates using a Node-MCU microcontroller as the central control unit, which manages motors and safety monitoring devices. The system begins when the power module supplies regulated voltage to the Node-MCU and all connected components. Once powered, the Node-MCU connects to the Wi-Fi network and allows the user to remotely control the robot using an IP-based interface. Through this interface, the user can send movement commands such as forward, backward, left, and right.

The motor driver receives these commands from the Node-MCU and drives the left and right DC motors to move the robot accordingly. For theft and safety monitoring, a smart camera module and the video surveillance system send real-time video to the user through Wi-Fi. This allows the operator to visually monitor the robot's surroundings and ensure that the food being delivered is safe. Additionally, a servo motor can be used to open or secure the food compartment, preventing unauthorized access during delivery.

Overall, the system integrates movement control, obstacle detection, live video monitoring, and safety alerts into one coordinated platform. This ensures secure, reliable, and efficient food delivery within indoor environments such as hostels, colleges, offices, or hospitals.

3.4 HARDWARE REQUIREMENTS

1. L298N motor driver:

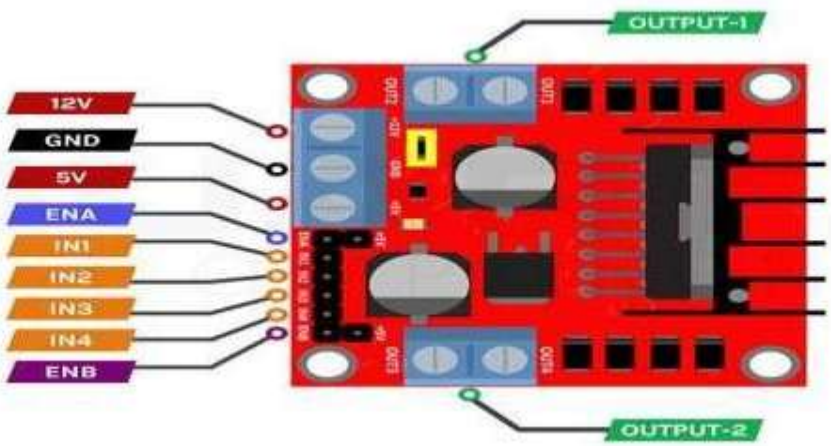

Fig.3.2: L298N motor driver

- Figure 3.2 shows theL298N motor driver & it is a dual H-bridge motor driver module.
- Works with motor voltage up to 5V-35V.
- It has onboard 5V regulator (can be enabled/disabled).
- It has IN1, IN2, IN3, IN4 pins for direction control.

2. ESP32 cam module:

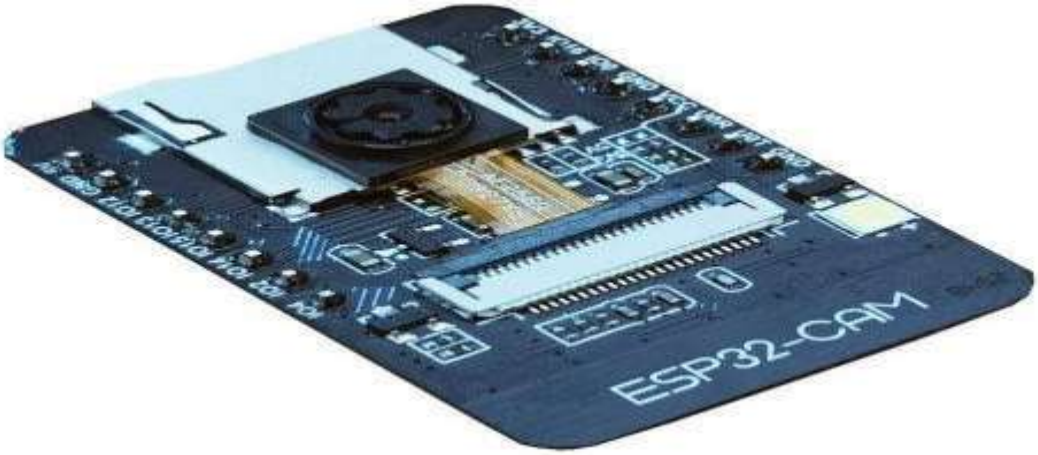

Fig.3.3: ESP32 cam module

- Figure 3.3 shows the ESP-32 CAM module which works on 5V power input.
- It is a small development board with the camera module.
- Cam module Used for image capture and video streaming.
- Also it can perform face detection and face recognition.

3. 16*2 LCD display:

- Figure 3.4 shows LCD display, it displays 32 characters for showing system messages.
- Used to show robot status, such as delivery progress, destination or emergency stops.
- Operating on 5V, making it compatible with most microcontrollers used in the project.

- Helps the operator or user monitor the robot's activity in real time.

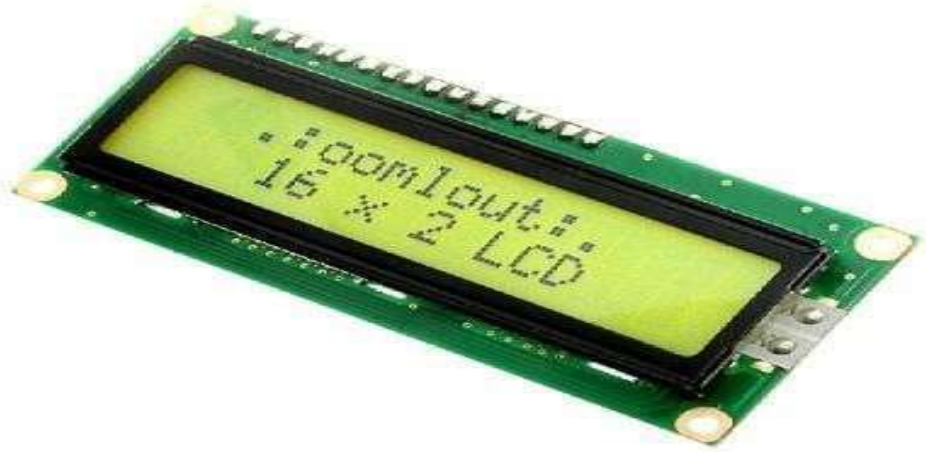

Fig.3.4:16*2 LCD display

4. Relay module:

Fig.3.5: Module Relay

- Figure 3.5 shows the relay module, it is 12V DC relay used for switching high-power loads.
- The relay coil operates on 12V DC to control the switching action.
- It supports up to 7A at 250V AC and 10A at 125V AC, suitable for motors and applications.
- It is an SPDT relay with common, Normally Open (NO), and Normally Closed (NC) contacts.

5. Step down voltage control module:

Fig.3.6: Step down voltage control module

- Figure 3.6 shows the step-down voltage control module which reduces a high battery voltage to a lower, safe voltage for the robot's electronics.
- Provides a stable DC output using the LM2596 buck converter.
- The output voltage can be adjusted using the small potentiometer.
- It works with high efficiency, saving battery power.

6. Lithium Battery:

Fig.3.7: Lithium battery (3.7V)

- Figure 3.7 shows the lithium batterie's, we used seven 3.7V batteries & these batterie's provides the main power source for running the robot and it's electronic components.
- Lithium batteries offer high energy capacity, allowing the robot to operate for longer periods.
- They are lightweight, which helps improve the robot's mobility and efficiency.
- Delivers a stable voltage output, ensuring smooth operation of motors and control circuits.

7. DC gear motors:

Fig.3.8: DC gear motor

- Figure 3.8 shows the DC gear motor it is12V DC gear motor provides the driving force for moving the robot.
- The built-in gearbox reduces speed and increases torque, allowing the robot to carry food safely.
- It operates smoothly on 12V power, suitable for battery-based robotic systems.
- The motor offers good control and stability, helping the robot move straight and handle turns properly.

8. 60mm wheels:

Fig.3.9: 60mm wheels

- Figure 3.9 shows 60mm wheels they provide smooth and stable movement for the robot.
- Their size offers a good balance between speed and control.
- They give the robot better grip for safe navigation while carrying food.
- Suitable for small to medium robots, ensuring reliable & safe mobility during delivery.

9.LED indicators:

Fig.3.10: LED indicators

- Figure 3.10 shows LED indicators that are used to show the robot's current status, such as power ON, movement, or delivery mode.
- They provide visual alerts for safety conditions like low battery.
- Different LED colors help quickly identify various robot states.
- They help operators and users understand robot activity at a glance.

3.5 SOFTWARE REQUIREMENTS

1. Arduino IDE:

Fig.3.11: Arduino IDE

- Figure 3.11 shows the Arduino IDE, which is used for writing, compiling and uploading the code to the ESP32-CAM.
- It Compiles the code to check for errors.
- It also Uploads the program to the board through USB.
- It supports libraries making it easy to add Wi-Fi, camera, LCD.

3.5 CIRCUIT DIAGRAM & EXPLANATION

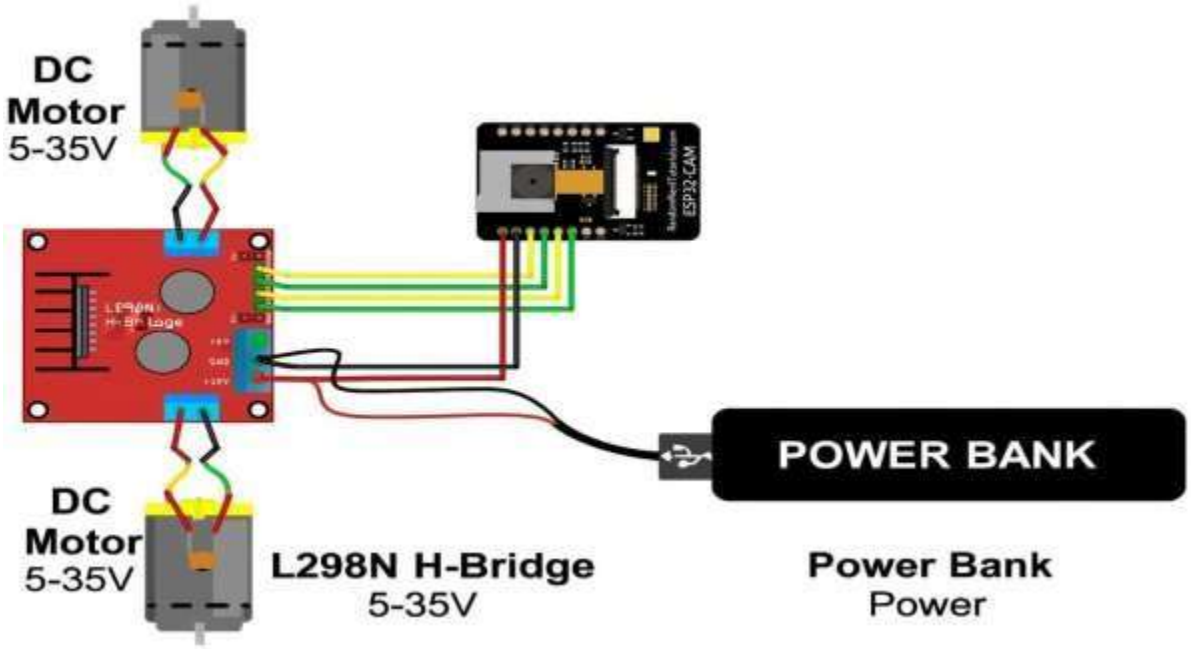

Fig.3.12: Motor driver interfacing with ESP-32 CAM for Robot Movement

Figure 3.12 shows the interfacing of an ESP-32 module with an L298N H-Bridge Motor driver to control two DC motors for robot movement.

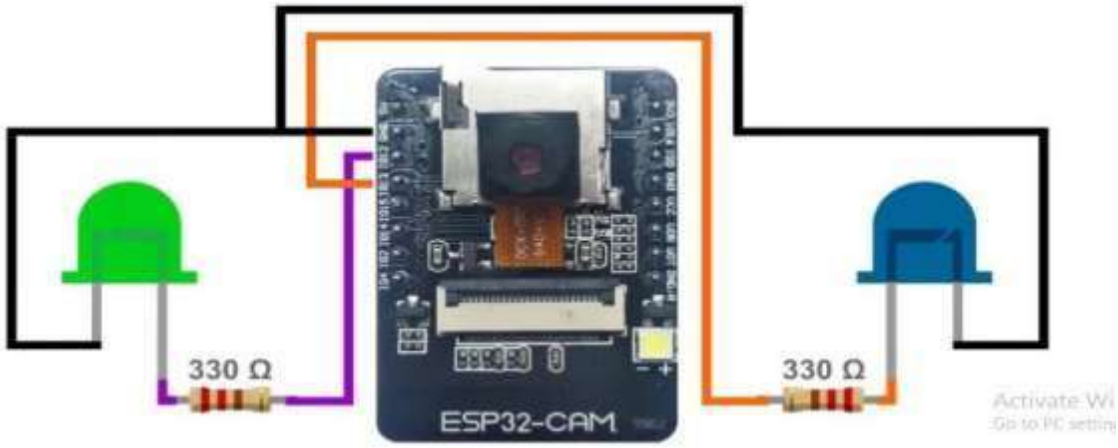

Fig.3.13: LED Status indicator circuit with ESP32-CAM

The Figure 3.13 illustrates an LED status indicator circuit interfaced with the ESP-32 CAM module using current-limiting resistors.

CONNECTIONS:

1. Battery Pack → Buck Converter

- The lithium batteries (3.7V) supply power.
- The buck converter regulates the voltage to a stable 5V.

2. Buck Converter 5V → ESP32-CAM

- 5V and GND connected to power the ESP32-CAM module.

3. ESP32-CAM → Relay Module

- One GPIO pin from the ESP32-CAM goes to the relay input.
- 5V and GND from ESP32-CAM power the relay module.
- Relay output controls the lock/door motor.

4. ESP32-CAM → LCD Display (16×2 with I2C)

- SDA and SCL pins connected to ESP32-CAM I2C pins.
- 5V and GND to power the LCD.

5. ESP32-CAM Camera Module

- Camera ribbon cable connected directly to the onboard camera slot.

6. LED Indicators

- LEDs connected to ESP32 GPIO pins through resistors.

7. Door Lock / Motor

- One wire connected to relay NO/NC output.
- Other wire to power supply.
- Relay switches the lock ON/OFF

CIRCUIT EXPLANATION

The project model consists of an ESP32-CAM module, an L298N motor driver, two DC motors, indicator LEDs, an LCD display, and a rechargeable battery pack. The ESP32-CAM is the main controller that captures video and also receives commands through Wi-Fi. It is connected to two LEDs through 330Ω resistors—one green and one blue—to show different status indications during operation. The L298N motor driver is used to control the left and right DC motors, and it receives input signals from the ESP32-CAM's GPIO pins, enabling smooth forward, reverse, left, and right movement. A power bank or battery pack supplies power to both the ESP32-CAM and the L298N driver through a voltage regulator circuit to ensure stable 5V output. The LCD screen is connected through I2C wiring and displays system status such as QR scan results or IP address information. All components are mounted neatly on the robot model, with proper wiring routed from the ESP32-CAM to the motor driver, LEDs, battery module, and LCD to ensure reliable functioning of the Food Delivery Robot with Safety Monitoring.

3.6 ALGORITHM & FLOWCHART

1. Start the system by powering ON the ESP32-CAM, LCD display, motor driver, and all connected modules.
2. The ESP32-CAM initializes Wi-Fi, camera module, GPIO pins, and LCD interface.
3. The LCD displays "QR SCANNER READY – WAITING FOR QR…".
4. The ESP32-CAM activates the camera and waits for a QR code to appear in the scanning area.
5. The system captures the QR image and decodes the QR data. The decoded value is compared with the stored authorized QR code in memory.
6. If the QR code is invalid: LCD displays "INVALID QR – TRY AGAIN"
7. System returns to QR scanning stage.

8. If the QR code is valid: Buzzer beeps to confirm access. LCD displays “MATCH PLZ WAIT FOR UNLOCK”.

9. The system displays its Wi-Fi IP address on the LCD for remote user control. The user enters the IP address into a browser, opening: Live video stream from ESP32- CAM.

10. The robot waits for movement commands such as Forward, Backward, Left, Right or Stop. The robot continues movement until the user presses the STOP command.

11. END.

FLOWCHART:

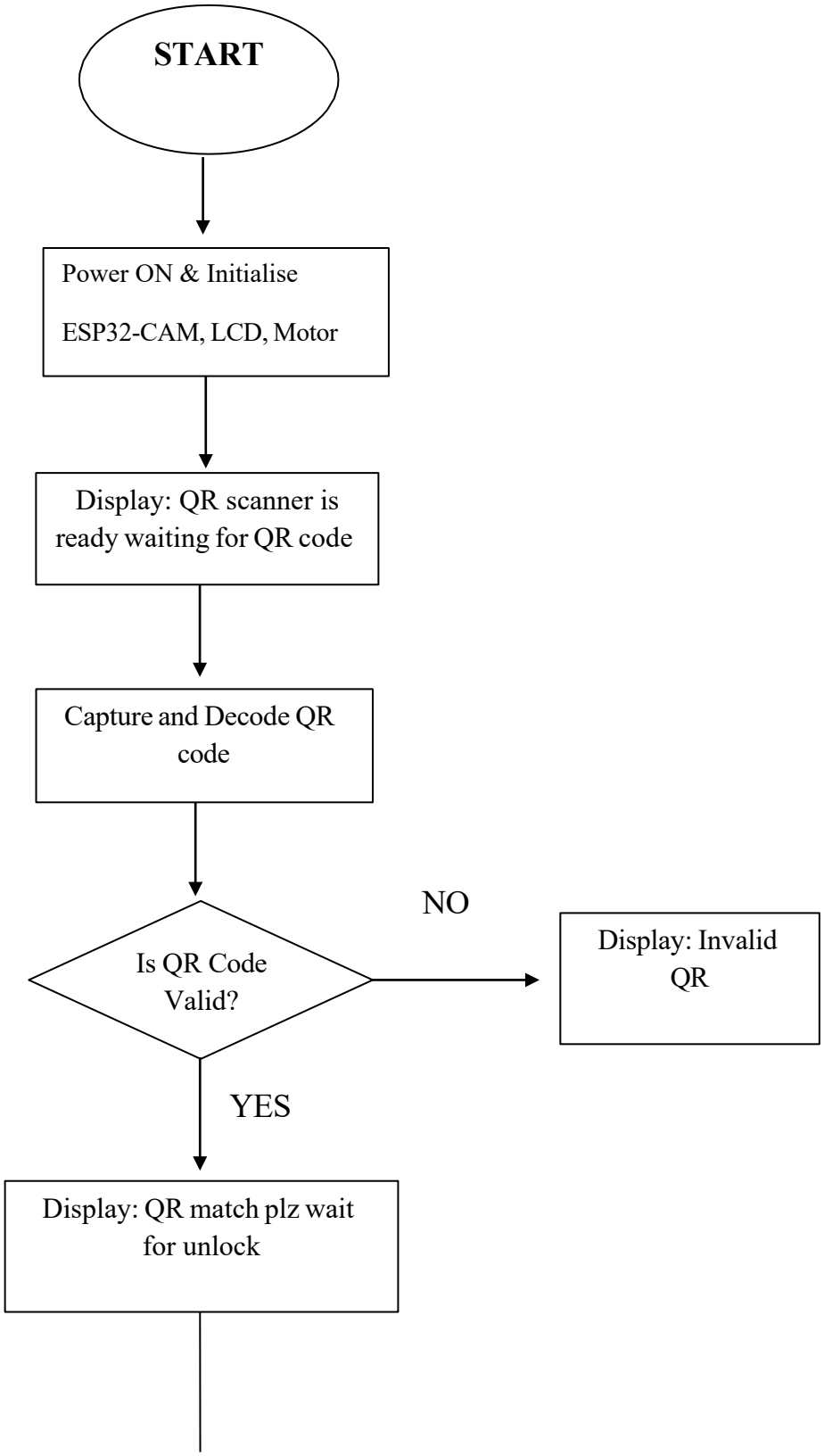
START
Power ON & Initialise
ESP32-CAM, LCD, Motor
Display: QR scanner is ready waiting for QR code
Capture and Decode QR code
Is QR Code Valid?
NO
Display: Invalid QR
YES
Display: QR match plz wait for unlock

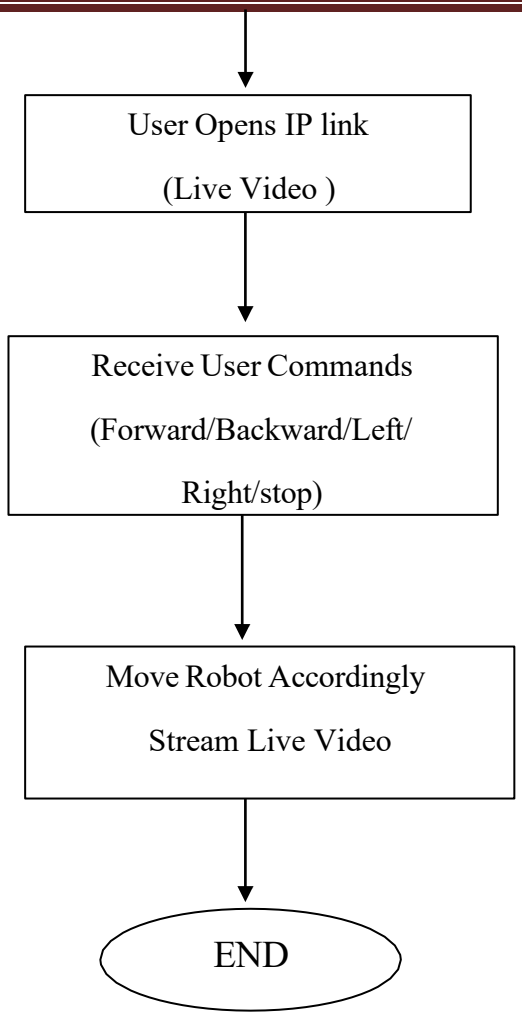
User Opens IP link
(Live Video)
Receive User Commands
(Forward/Backward/Left/
Right/stop)
Move Robot Accordingly
Stream Live Video
END

3.7 IMPLEMENTATION & TESTING

The implementation of the Food Delivery Robot with Smart Monitoring involves assembling the hardware components and integrating them with the programmed ESP32-CAM controller. First, the power system is set up using a battery pack and voltage regulator to provide stable 5V supply. The ESP32-CAM is mounted and connected with the LCD display, relay module, indicator LEDs, and door mechanism. The motor driver and motors are wired for movement control if included. The QR code program, unlocking logic, and IP video streaming code are uploaded into the ESP32-CAM using Arduino IDE. After uploading, the components are fixed onto the robot model, and the wiring is organised for stable operation. The system is then configured to scan the QR code, unlock the compartment, display the IP address on the LCD, and stream live video to the user. All functions are combined to form the complete working smart monitoring robot.

Testing is carried out to ensure that every feature of the robot works correctly and safely. First, the QR scanning function is tested by using valid and invalid QR codes to confirm the unlocking system responds accurately. Next, the LCD display is checked to ensure it shows the correct messages such as “Scan QR”, “Access Granted”, and the assigned IP address. The Wi-Fi connectivity is tested to verify that the live video feed opens through the browser using the IP link. The relay operation is tested by switching the door lock ON and OFF based on QR validation. The overall system is then tested together to confirm smooth operation, including power stability, LED indicators, and response time. Continuous run testing is performed to ensure the robot works reliably without restarting or errors. This ensures the entire smart monitoring system functions as expected.

3.8 PROJECT ESTIMATION

Table.3.1 consists of overall estimation details of food delivery robot with smart monitoring system.

Table.3.1: Estimation details of the project

SI.NO	COMPONENTS	PRICE
1	L298N Motor driver	₹600/-
2	ESP-32 Camera module	₹1800/-
3	16*2 LCD display	₹725/-
4	Relay module	₹450/-
5	Step down voltage control module	₹500/-
6	Lithium battery	₹420/-
7	Magnetic lock	₹500/-
8	DC gear motors	₹578/-
9	60mm wheels	₹720/-
10	LED indicators	₹100/-
11	Project body	₹1000/-
12	Connecting wires	₹200/-
13	Miscellaneous	₹1000/-
	Total	₹8593/-

CHAPTER-4

RESULTS & DISCUSSION

4.1 EXPERIMENTAL RESULTS

Fig.4.1: Complete hardware setup of food delivery robot system

Fig.4.2: LCD display indicating system status

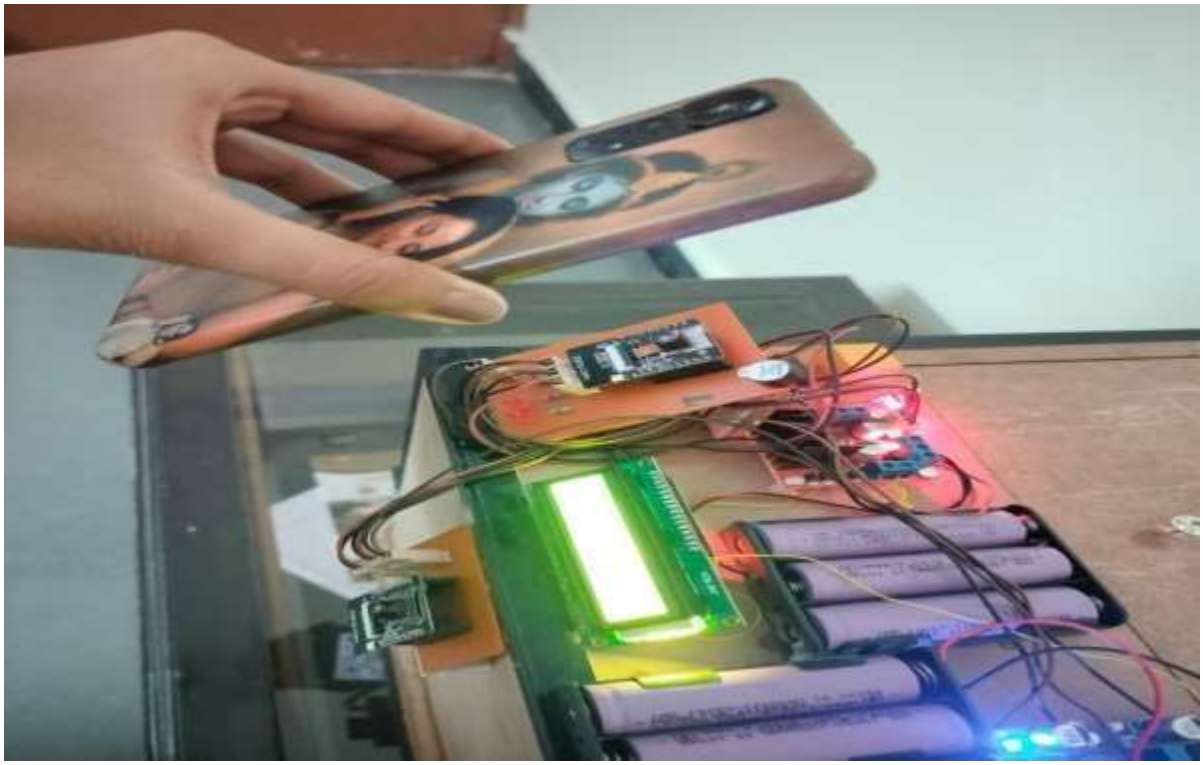

Fig.4.3: QR code scanning for door unlocking

Fig.4.4: Testing of food delivery robot with safety monitoring

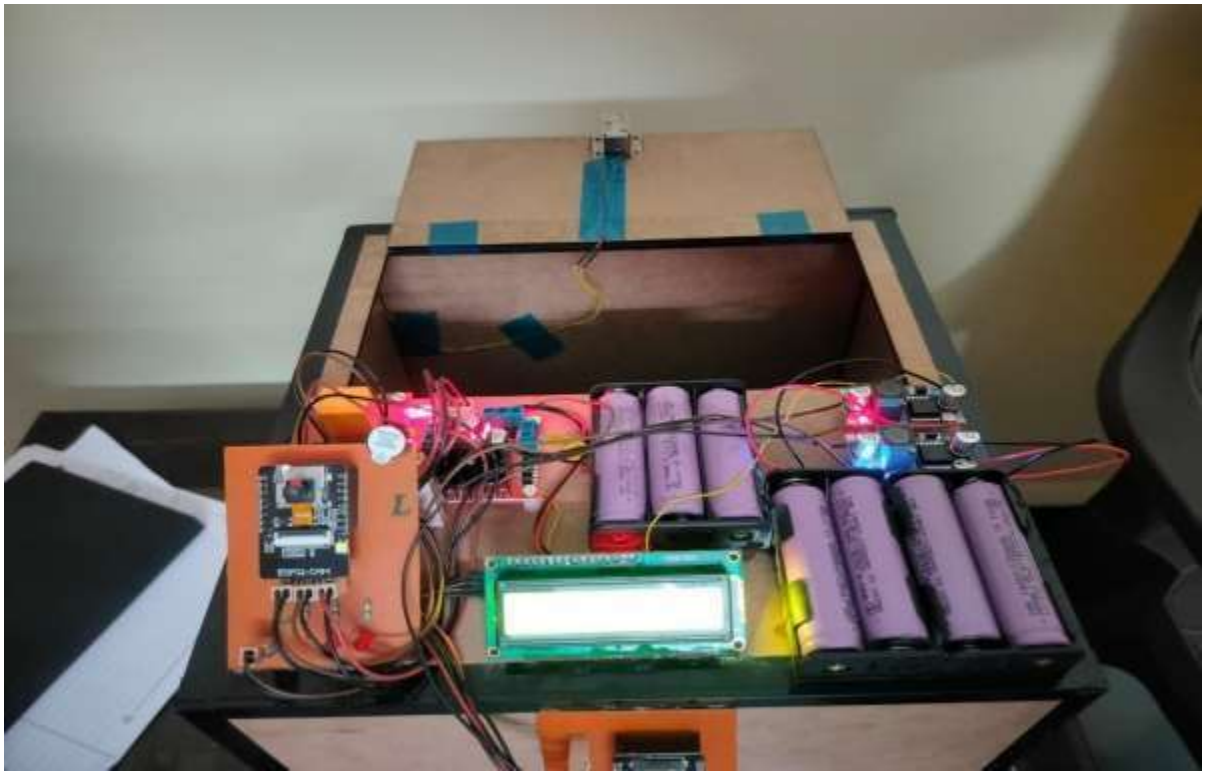

Fig.4.5: Door unlocked after successful QR code verification

Figures 4.1 to 4.5 illustrate the complete operation of the QR-based door unlocking system. Figure 4.1 shows the overall hardware setup of the project, including the full circuit arrangement used in the prototype. Figure 4.2 displays the LCD screen indicating "QR Scanner Ready," confirming that the system is switched on and waiting for a QR code input. Figure 4.3 demonstrates the QR code scanning process using a mobile phone to authenticate the user. After scanning, Figure 4.4 shows the LCD message "QR Match, Please Wait for Unlock," indicating that the code has been successfully verified and the unlocking process is in progress. Finally, Figure 4.5 presents the successful unlocking of the door, showing the compartment opening after valid QR authentication.

4.2 OBSERVATION TABLE

Table.4.1 validates the correct functioning of the food delivery robot by comparing expected outputs with actual results across all operational tests.

Table.4.1: Observation table

SI.NO	Operation Performed	Expected Output	Actual Observation
1	Power ON the robot	LCD displays “QR SCANNER READY”	LCD displayed “QR SCANNER READY-WAITING.”
2	Scan invalid QR code	System should reject & ask to rescan	“INVALID QR-TRY AGAIN” message displayed
3	Scan valid QR code	Authentication &unlocking of box	“OR MATCH-PLZ WAIT FOR UNLOCK” displayed
`4	Unlock mechanism	Food box lock opens	Lock open’s successfully
5	Connect using IP address	Live camera feed loads	Live video streaming successful
6	Movement command test(F/B/L/R)	Robot should respond smoothly	Robot responded correctly to all commands
7	LED indicators test	LEDs display status	All LEDs worked properly
8	Complete delivery cycle	Smooth& safe delivery	Delivery completed without issues

4.3 DISCUSSION & ANALYSIS OF RESULTS

The prototype of the Food Delivery Robot with Safety Monitoring and QR-Based Access Control was successfully developed and tested. The results captured during the testing process clearly show that all the major hardware modules were functioning as expected. During initial power-on, the LCD displayed "QR SCANNER READY – WAITING FOR QR…", which indicates that the microcontroller, camera module, LCD interface and power supply were properly initialized. This confirms that the system successfully entered the standby mode and was ready to receive a QR code input.

When a valid QR code was scanned using the ESP32-CAM, the system processed the QR data and compared it with the stored reference value. The LCD then displayed "QR MATCH PLZ WAIT FOR UNLOCK", proving that the QR decoding algorithm was functioning correctly. This validated the authentication mechanism, ensuring that only authorized users can access the delivery box.

The pictures also show stable operation of the power module, with battery banks and buck converters supplying sufficient voltage to all components. No overheating or flickering was observed, which indicates that the power distribution across the system was reliable. The LEDs on the motor driver and voltage regulator boards further confirm proper functioning and steady current flow. The mechanical part of the system—the top delivery box lid—also responded correctly to the QR match signal. The box successfully unlocked and opened after QR verification, demonstrating the effective integration between the software logic and the hardware actuation module.

Overall, the results prove that the system is capable of securely delivering and storing food using QR authentication, camera monitoring, and microcontroller-based control. The successful display output, stable power performance, accurate QR detection and proper unlocking mechanism collectively show that the prototype met the design expectations and performed well under real-time conditions.

4.4 PERFORMANCE EVALUATION

The performance of the Food Delivery Robot with Smart Monitoring was evaluated based on its response time, stability, accuracy of control, video streaming quality, and reliability of the QR authentication system. During testing, the robot responded quickly to movement commands sent through the Wi-Fi IP interface, demonstrating smooth navigation and consistent motor control. The Wi-Fi communication remained stable within indoor environments, and the ESP32-CAM provided continuous live video without major lag, allowing the operator to clearly monitor the robot's path and surroundings.

The QR authentication mechanism also performed accurately; valid QR codes unlocked the compartment instantly, while invalid codes were correctly rejected, ensuring secure access. The smart lock operated reliably each time, showing proper synchronization between software logic and the relay module. Power performance was stable throughout the tests, with no overheating or voltage drops, confirming that the battery and buck converter delivered sufficient current to all components. Additionally, the robot maintained good structural balance and moved smoothly on flat indoor surfaces while carrying food items, proving that the motors and wheels were well-suited for the load. Overall, the system demonstrated efficient, safe, and reliable indoor delivery, successfully meeting the project objectives and performing consistently under multiple test conditions.

CHAPTER-5

APPLICATIONS & ADVANTAGES

5.1 ADVANTAGES

1. Reduces Human Effort

The robot delivers food automatically, so staff do not need to walk repeatedly to deliver dishes. This saves time and physical effort.

2. Contactless Delivery

Very useful in hospitals, hostels, and restaurants to reduce human contact and maintain hygiene.

3. Improves Efficiency

The robot can deliver items faster and more consistently compared to human delivery, especially during busy hours.

4. Remote Control Operation

Using Wi-Fi IP address control, the operator can control the robot without touching it directly. This reduces errors and enables easy operation from any connected device.

5. Real-Time Monitoring

The camera helps monitor the robot's path and live surroundings, improving security and ensuring safe movement.

6. Cost-Effective

Once developed, the robot reduces labor costs and works for long hours without fatigue.

5.2 APPLICATIONS

1. Indoor Restaurants

The robot can deliver food from the kitchen to dining tables inside the restaurant, reducing staff workload and improving service speed.

2. Hospitals – Indoor Wards & Corridors

The system can deliver food trays, medicines, or medical items inside hospital floors without physical contact, ensuring hygiene and safety.

3. Hostels & College Canteens

Useful for delivering lunch, snacks, or parcels inside hostels or canteen halls, especially during peak hours.

4. Office Buildings (Indoor Delivery)

It can deliver files, lunch boxes, or small packages between cabins, meeting rooms, and departments inside the office.

5. Hotels – Indoor Room Service

The robot can move inside hotel hallways to deliver food or essential items to guest rooms.

6. Smart Home Indoor Automation

It can deliver food or small items from kitchen to rooms inside a house as part of home automation.

5.3 LIMITATIONS

1. Limited to Indoor Use Only

The robot cannot operate outdoors because the wheels, motors, and sensors are designed only for smooth indoor surfaces.

2. Depends on Wi-Fi Connectivity

If the Wi-Fi signal becomes weak or disconnects, the robot may lag, stop responding, or move slowly.

3. Low Load Carrying Capacity

The robot can carry only small to moderate food weight. Heavy loads may affect speed, battery, or motor stability.

4. Limited Camera Quality

ESP32-CAM gives basic video quality. In low light or crowded environments, the visibility may decrease.

5. QR Scanner Works Only at Close Range

ESP32-CAM requires the QR code to be placed at a proper distance; scanning from far distance is difficult.

6. Speed is Low for Long Distances

Indoor robot speed is deliberately kept slow for safety, which may not be suitable for fast delivery situations.

CONCLUSION

The Indoor Food Delivery Robot with Smart Monitoring successfully demonstrates the integration of automation, wireless control, and real-time monitoring for indoor food delivery. The system combines ESP32, ESP32-CAM, motor drivers, and Wi-Fi control to navigate smoothly across indoor surfaces while providing live video feedback to the operator. This ensures that the robot can deliver items efficiently without manual supervision at every step. During testing, the robot responded accurately to remote commands, maintained stability while carrying food loads, and displayed real-time messages on the LCD. The smart monitoring feature allowed the user to track the robot's movements and surroundings, making indoor delivery more convenient and reliable. The coordinated operation of hardware and software modules proved the design's effectiveness and reliability in indoor environments like restaurants, hostels, offices, and hotels.

Although the system has some limitations, such as dependence on Wi-Fi, limited battery backup, and moderate payload capacity, it successfully meets the project objectives. Overall, the project highlights the potential of smart robotics for indoor automation, reducing human effort, improving delivery efficiency, and offering a practical solution for modern service environments. Future enhancements could include autonomous navigation, higher payload capacity, and improved battery life to further increase its applicability.

FUTURE SCOPE

- The robot can be upgraded with automatic navigation using sensors or Li-Fi, allowing it to move without manual Wi-Fi control.
- A GPS or indoor positioning system can be added so the robot can deliver food to exact locations automatically.
- The QR-based authentication can be replaced with face recognition or RFID for faster and more secure access.
- A temperature-controlled food box can be added to keep the food hot or cold during delivery.

- The robot can be designed to carry heavier loads by using stronger motors and improved chassis materials.
- A mobile app can be developed for fully automated booking, tracking, and delivery notification.
- Battery backup can be improved using rechargeable lithium batteries or wireless charging stations.
- Multiple robots can be interconnected to form a smart delivery system inside hostels, hospitals, restaurants, or offices.
- AI-based monitoring can be integrated so the robot can detect crowds, obstacles, and unsafe conditions automatically.
- Voice assistant support can be added so the user can control the robot through voice commands.

REFERENCES

[1] S. K. Jagatheesaperumal, S. E Bibri, J. Huang, J. Rajapandian, & B. Parthiban. Artificial intelligence of things for smart cities: advanced solutions for enhancing transportation safety. Computational Urban Science, 4(1) (2024).

[2] Thulasingam, Muthukumaran, and Muruagapermual Krishnamoorthy. "IOT Based Intelligent Energy Monitoring of Grid connected Hybrid systems and controlling of Loads using PLC." Transactions on Energy Systems and Engineering Applications 5, no. 2 (2024): 1-15.

[3] K. Sallam, M. Mohamed, & A. W. Mohamed. Internet of Things (IoT) in Supply Chain Management: Challenges, Opportunities, and Best Practices. Sustainable Machine Intelligence Journal, (2023).

[4] N. S. Balasingam, M. K. Zapiee, & D. Mohana. Smart Home Automation System Using IOT. International Journal of Recent Technology and Applied Science (IJORTAS), 4(1), 44–53 (2022).

[5] Ma. M Sadeeq, & S. Zeebaree. Energy Management for Internet of Things via Distributed Systems. Journal of Applied Science and Technology Trends, 2(02), 80–92 (2021).

[6] M. M. Abrar, R. Islam, & Ma. H. Shanto, An Autonomous Delivery Robot to Prevent the Spread of Coronavirus in Product Delivery System. 2020 11th IEEE Annual Ubiquitous Computing, Electronics & Mobile Communication Conference (UEMCON), 0461–0466 (2020)

[7] T. Davenport, A. Guha, D. Grewal, & T. Bressgott, How artificial intelligence will change the future of marketing. Journal of the Academy of Marketing Science, 48(1), 24–42 (2019).

[8] S. P. Bharati, Y. Wu, Y. Sui, C. Padgett, & G. Wang. Real-Time Obstacle Detection and Tracking for Sense-and-Avoid Mechanism in UAVs. IEEE Transactions on Intelligent Vehicles, 3(2), 185– 197 (2018).

FOOD DELIVERY ROBOT
WITH SMART MONITORING